ATP Simulation of Capacitor Protection Scheme

Russell W. Patterson
Tennessee Valley Authority

Presented to the

57th Annual Georgia Tech
Protective Relaying Conference
May 7-9, 2003

Abstract

This paper describes the ATP (Alternative Transients Program) modeling and simulation of a protection scheme used to protect 161kV shunt capacitor banks in the TVA region. The ATP simulations uncovered a problem with the current transformer used in the scheme (due to excitation characteristic) making the scheme ineffectual. This analysis resulted in replacing CTs used in this scheme with one having an appropriate excitation characteristic. The paper describes the protection scheme, modeling of the current transformer and capacitor bank in ATP, and a hand calculation method of evaluating the schemes performance.

Introduction

The diagram below shows the general arrangement of one of the capacitor banks at Albertville, AL 161kV substation.

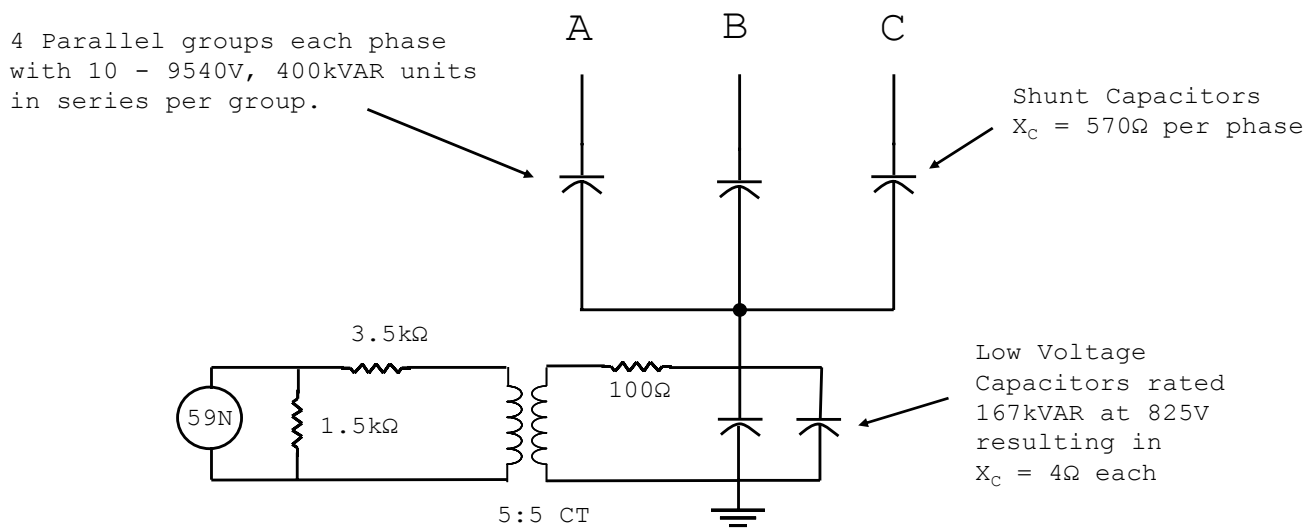

Figure 1. Capacitor Bank Unbalance Protection Scheme

The shunt capacitor banks are made up of 4 parallel strings in each phase. Each string is made up of 10 capacitor units in series. Each capacitor unit is rated 9,540V and 400kVAR and is comprised of 5 series capacitors rated 1,908V and 80kVAR each.

Since the phase reactance of the shunt capacitor bank (570Ω) is much greater than the reactance of the two parallel low voltage capacitors (2Ω) in the neutral, the bank can be considered solidly grounded for unbalance calculation purposes. This unbalance protection scheme monitors the voltage developed across the low-voltage capacitors in the neutral of the capacitor bank. This voltage is produced by neutral current flowing due to shorted capacitors, system voltage unbalance, or system ground faults.

The 100Ω resistor in series with the transformer (a CT is used in this case because a 1:1 VT rated for 15kV is not readily available) is to assure that the transformer would come out of saturation promptly when the capacitor bank is energized. It also is used to prevent ferroresonant voltage transients that can occur with the CTs inductance during switching. Since a 1:1 transformer is used the secondary resistance (1.5kΩ + 3.5kΩ) is reflected into the primary by a turns ratio squared of 1 (neglecting the influence of the CT magnetizing branch). So, the voltage to the 59N relay is effectively the voltage across the low voltage neutral capacitors times the resistive voltage divider 1.5/(1.5+3.5). The voltage to the relay is equal to VN (neutral point to earth voltage) times 0.30.

For an explanation of the reasons for choosing this method see the paper, “Protection of Grounded Wye Capacitor Banks: Using a Low Voltage Neutral Capacitor”, by John E. Harder (ABB). This paper recommends using one low voltage neutral capacitor for every 100 Amps of nominal phase current. In this case nominal phase current (for 48MVAR bank) will be 172A so two neutral capacitors are used. This rule of thumb is used so that if only one or two phases of the capacitor bank are energized the voltage across the low voltage neutral capacitors will not exceed 400V. The low voltage capacitors used are rated 167kVAR at 825V. This corresponds to 8252/167,000 ≈ 4Ω each at 60Hz.

59N Setpoint Calculations

This relay measures neutral point voltage and alarms or trips depending on the severity and duration of the unbalance. If a capacitor fails it will short (fuseless capacitors are supposed to fail shorted) leaving only 4 capacitors in the series unit. The overall impedance of the entire leg will be 49/50 of that for a healthy leg (98% of normal). The current in that leg will be 50/49 of what it is in a healthy leg (2.0408% higher). This means the string current will go to 42.86A and a neutral current of 0.86A will result. A 0.86A neutral current results in a VN voltage of 0.86A x 2Ω = 1.72V. The relay will see 1.72V x 1.5/5.0 = 0.516 ≈ ½V. With two capacitors in one unit shorted the overall leg impedance goes to 96% of normal. The current increased to 104.167% and the neutral (VN) voltage goes to 3.5V impressing 1.05V across the 1.5kΩ resistor input to the 59N.

The formula for calculating the overvoltage on the remaining capacitors is simply 50/(50 - # caps shorted). The number of caps shorted to produce a 10% overvoltage on the remaining caps is 1.10 = 50/(50-X). X = 4.5 caps. With 4 capacitors shorted the overvoltage on the remaining capacitors is 8.70%. With 5 capacitors shorted (one entire 400kVAR unit) the overvoltage on the remaining capacitors jumps to 11.1%. The alarm level will be set at half this to alarm at 5.5% overvoltage (will actually only come in when 3rd capacitor is shorted).

With 4 capacitors shorted the voltage impressed on the 59N will be [1/(0.92) x 42]-42 x 2 x 1.5/5.0 = 2.2V. With 5 capacitors shorted the relay voltage will be 2.8V. The relay will be set to alarm with the loss of 3 or more capacitors and trip with loss of 5 or more. This is in line with ABB recommendations (see section 3 of “Instruction Manual Fuseless Capacitor Bank”) and verified with ATP simulation of the capacitor bank and low-voltage capacitive grounding system.

Relay trip setpoint = 2.5V with a delay to trip of 1.5 seconds (to avoid misoperating on slow clearing system ground faults).

Relay alarm at 50% of trip value = 1.25V with a delay to alarm of 60 seconds. This long delay should avoid any spurious alarms.

These setpoint levels and time delays can be compared to the maximum permissible voltage/duration specified in IEEE Std. 1036-1992. The second column (Maximum permissible voltage) is a multiplying factor to be applied to the rated voltage rms.

Duration	Maximum permissible voltage
6 cycles	2.20
15 cycles	2.00
1 second	1.70
15 seconds	1.40
1 minute	1.30

Table 1. Maximum Permissible Capacitor Voltage.

ATP Modeling

The capacitor bank and low-voltage neutral unbalance protection scheme were modeled in ATP. The external system was modeled as a simple source behind Thevenin impedance equivalent. Each of the four strings in each phase were modeled with ten series capacitor groups per string. One capacitor group in one string of A-phase was further subdivided into five individual capacitor units for ease of modeling. Figure 2 shows part of the network modeled. The voltage sources labeled SRCA, SRCB, SRCC are ATP "type 14" and are simply ideal voltage sources whose voltage amplitude and phase angle can be specified. The Thevenin impedance is attached to these voltage sources and is a simple ATP "Symmetric RL coupled line model" consisting of the zero and positive sequence values of the Thevenin impedance. A simple "RLC" element is used to model the 1600μH inductors present between the system and circuit switcher. A simple time-controlled switch is used to model the circuit switcher connection to the capacitor bank.

All three phases are modeled identically with the exception that one of the ten groups in one of the four strings of A-phase is explicitly modeled as its five series capacitor units. This is to easily accommodate the shorting of different combinations of these five capacitor units during simulation.

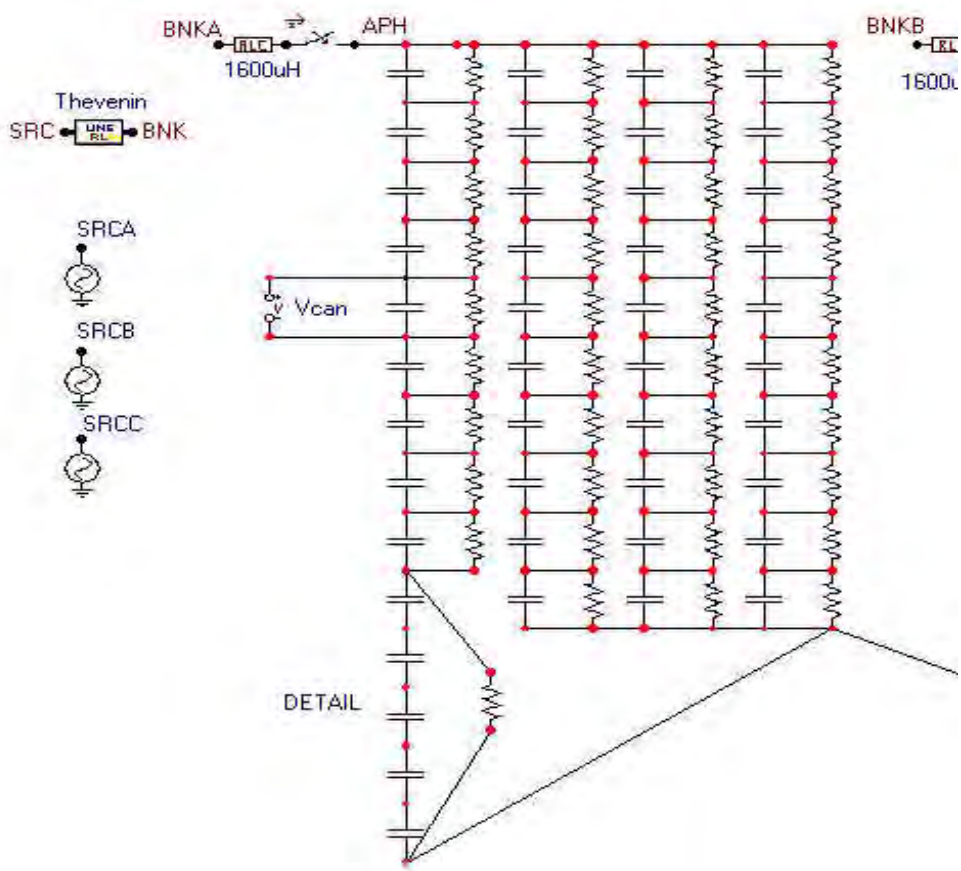

Figure 2. Snapshot of ATP graphic showing system equivalent source behind Thevenin impedance and A-phase model of capacitor bank.

The neutral end of each phase are brought together and taken through a single phase current probe. The arrow on the current probe symbol shows the relative direction of current. Two low-voltage capacitors are modeled in parallel to ground. In parallel to these capacitors is the voltage measuring system comprised of the 100Ω resistor in series with the 5:5 CT. The secondary of the CT is closed by the series circuit of the 3.5kΩ and 1.5kΩ resistances. In this graphic the neutral voltage is labeled VN, the voltage across the primary of the CT is labeled VP, and the voltage to the relay is labeled VR.

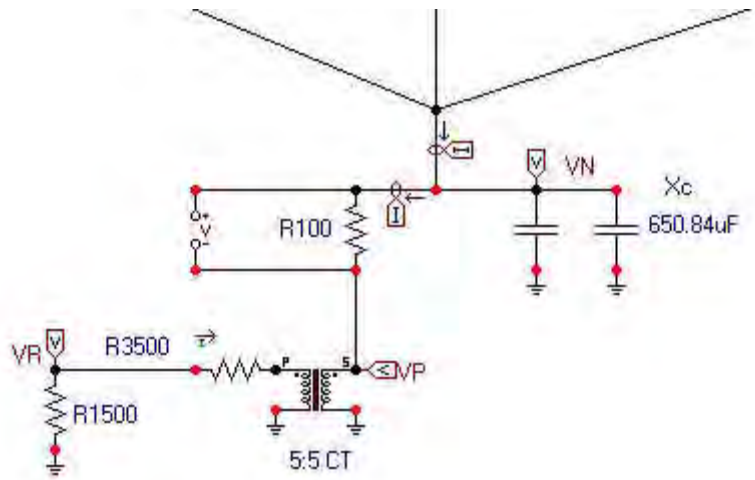

Figure 3. Snapshot of ATP graphic showing model of neutral unbalance protection scheme.

The model is straightforward, and the only complication to this simple network is the saturation characteristic of the CT. The CT is modeled as an ATP "Single phase saturable transformer". The transformer is modeled with the usual parameters (such as resistance in primary and secondary windings, inductance in primary and secondary winding, rated voltage in primary winding, rated voltage in secondary winding etc.) as well as its saturation characteristic. Table 2 shows the saturation curve data used to model the C100 CT used in this application (model KOR-15C). Appendix A shows the ATP file used to create a punch (*.pch) file for inclusion in the ATPDraw case.

IRMS (A)	**VRMS** (V)
0.012	1.0
0.130	50.0
0.144	60.0
0.165	70.0
0.194	80.0
0.230	90.0
0.281	100.0
0.500	114.0
100.0	144.0

Table 2. Saturation curve points for C100 Current Transformer.

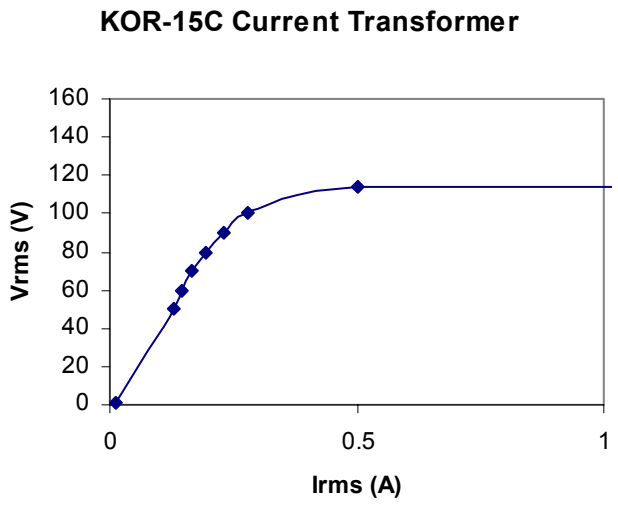

Figure 4. Saturation curve for C100 Current Transformer.

Results of ATP Simulation

Case 1 - One phase open on capacitor bank, closing at t=33ms.

The plot in Figure 5 shows the neutral voltage and the relay voltage with A-phase switch closing just after time t= 33 ms. B and C-phase have been energized since t = - infinity. The model shows the CT saturating and providing a reduced fundamental voltage to the 59N relay.

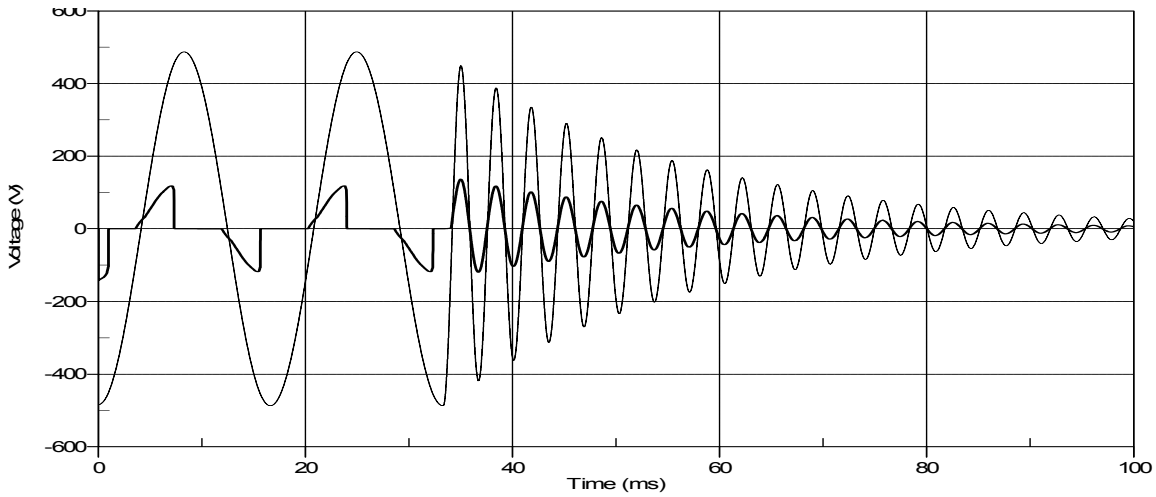

Figure 5. A-phase open initially, then closed at time t=33 ms.

For comparison purposes the same case was run assuming the CT was ideal (excluded the CT saturation characteristic). As expected, the voltage VR is just a scaled version of VN with no sign of saturation.

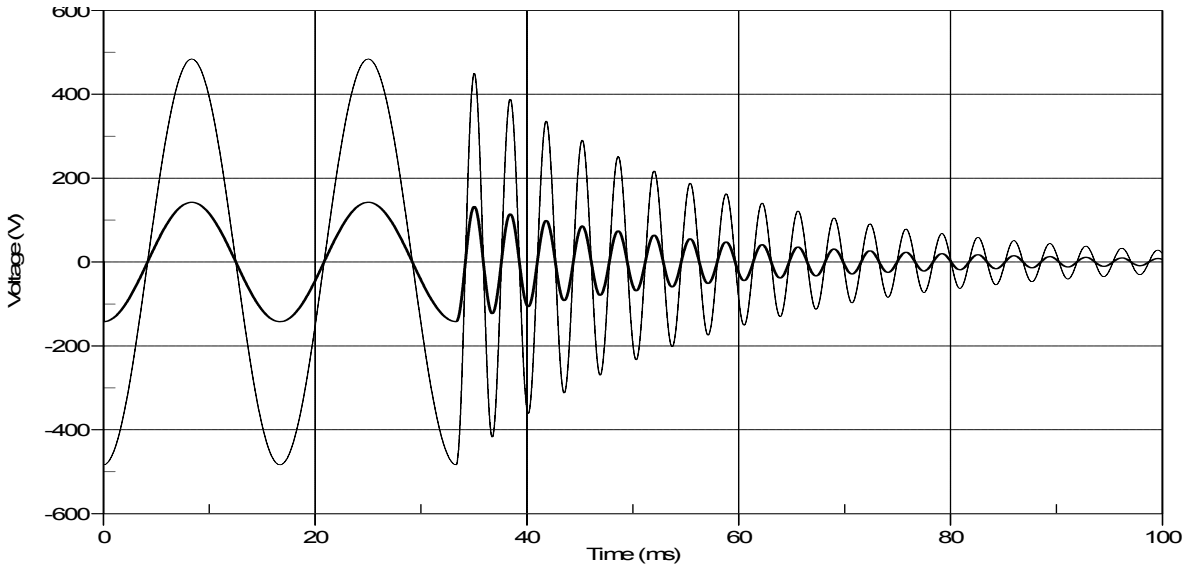

Figure 6. Repeat of Case 1, modeling CT as ideal transformer.

Case 2 – Bolted A-phase to ground fault on 161kV bus.

The plot in Figure 7 shows the neutral voltage (dashed) and the CT primary voltage (bold) with a solid A-phase to ground fault on the 161kV bus. Again, the C100 CT is heavily saturated.

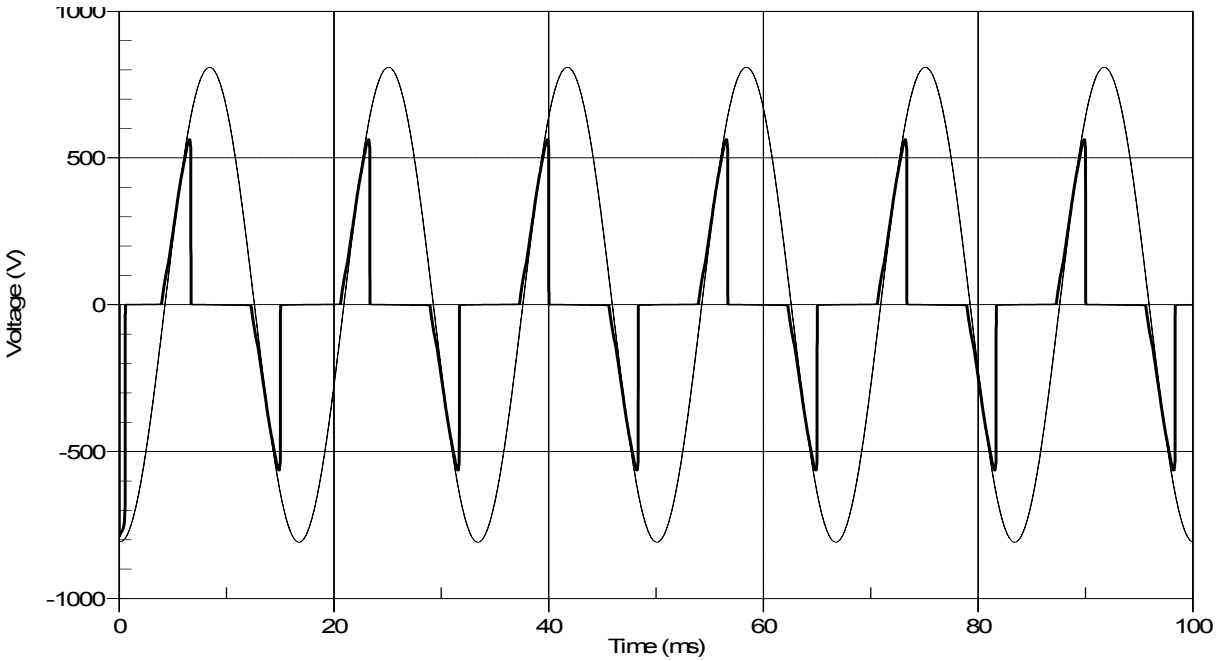

Figure 7. Bolted A-phase to ground fault on 161kV bus.

Cases 1 and 2 made it apparent that this CT was saturating, raising questions as to how the scheme would perform under other unbalance conditions where the relay would be depended on to operate. A harmonic analysis of the waveform of Figure 5 in Mathcad indicated that the fundamental (60Hz) component has amplitude (from sliding DFT Fourier analysis) somewhat above 50V. This corresponds to a fundamental RMS value of over 35V to the relay. As it turns out this is not a problem for the relay since these voltages presented to it are well above its trip setpoint.

It is important to note that the inaccuracy of the scheme is most pronounced when the CT primary voltage is in the 1.0V range, since the alarm and trip settings are in this range.

Case 2 – One capacitor in one series group shorted.

One capacitor unit in one series group is shorted for this simulation. Figure 8 shows the voltage presented to the relay for the case of the saturable CT model and for the ideal CT model. It is apparent from this plot that the excitation draw of the CT has produced a voltage drop in the 100Ω resistor that has reduced the voltage applied across the CT. This is just under a 35% error in magnitude.

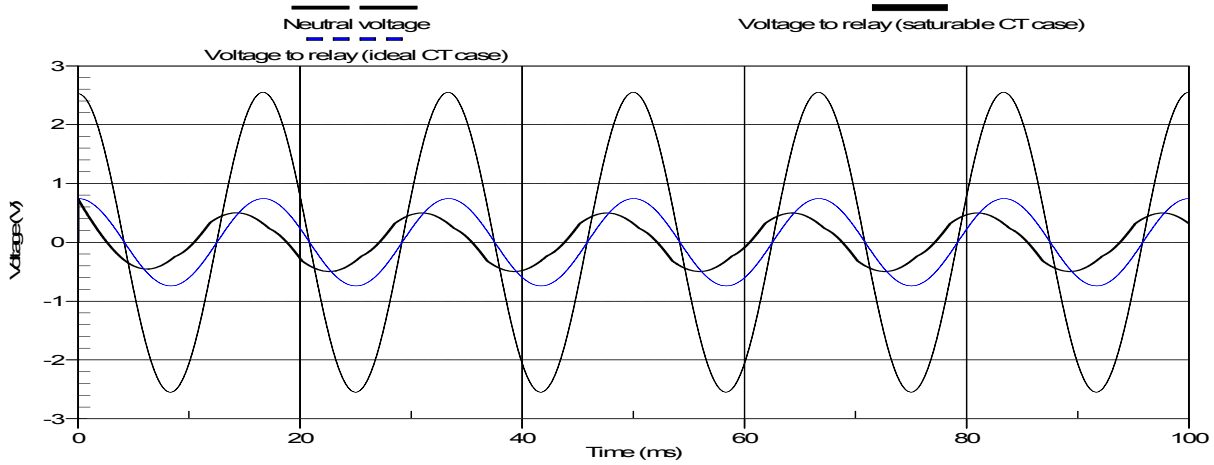

Figure 8. One capacitor unit shorted in one series group.

Case 3 – Two capacitors in one series group shorted.

In this case the voltage to the relay for the saturable CT is closer to that predicted with the ideal CT. This is the case as more capacitors are shorted until the point where saturation begins to appear (between 4 and 5 series groups shorted).

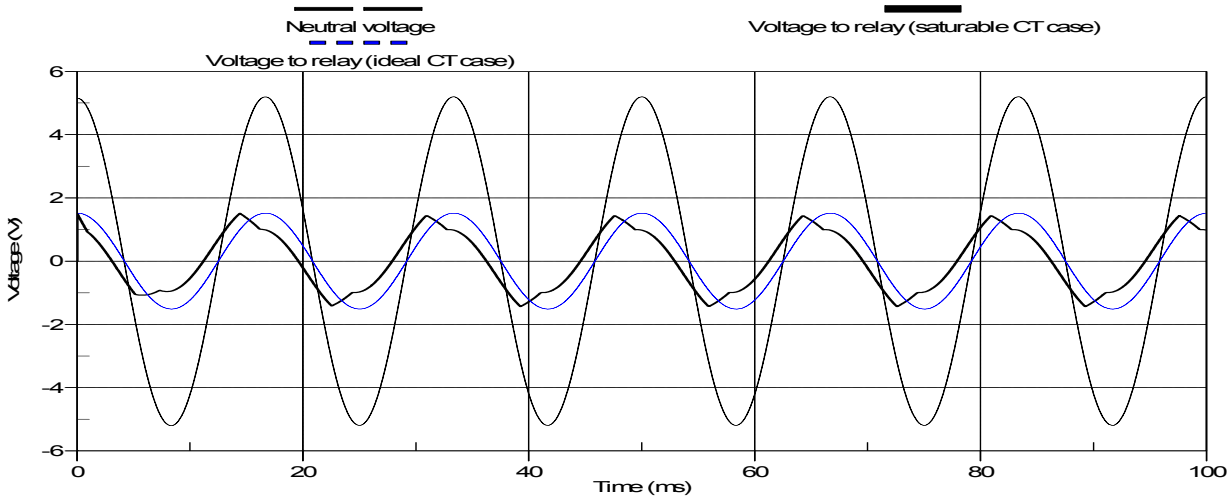

Figure 9. Two capacitor units shorted in one series group.

Modeling the old fashioned way

The diagram in Figure 10 shows the protection scheme with the capacitor bank and low voltage neutral capacitors replaced with a simple voltage source, VN. The variable reactor shown in the secondary of the CT represents the magnetizing branch.

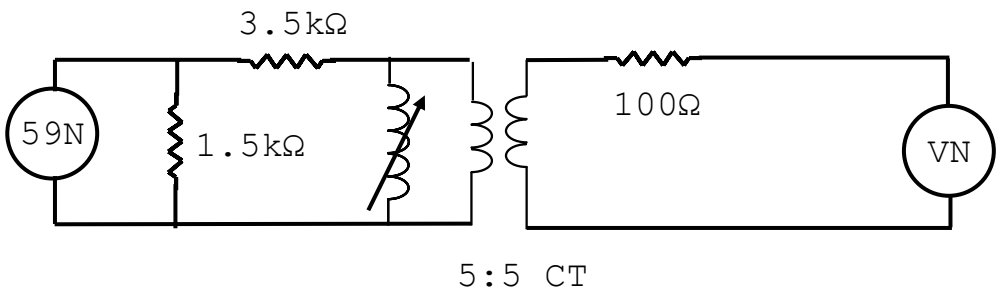

Figure 10. Circuit diagram of low-voltage unbalance protection scheme.

Neglecting the magnetizing branch the current draw through the 100Ω resistance will be:

$$I_N = VN / (100\Omega + 5000\Omega)$$

So, for VN = 1.0V the current will be 0.196mA. This 0.196mA would cause a 19.6mV drop in the 100Ω resistor resulting in 0.98V being presented to the primary of the CT and likewise to the secondary voltage divider circuit.

From the KOR-15C saturation data the magnetizing branch draws 12mA when 1.0V is across the CT. This equates to a magnetizing reactance of 1.0 / 12mA = j83.3Ω. Including the effects of the magnetizing branch the current through the 100Ω resistor will be:

$$I_N = VN / [100\Omega + (5000\Omega * j83.3\Omega) / (5000\Omega + j83.3\Omega)]$$

$$I_N = VN / (101.4\Omega + j\,83.3\Omega)$$

So, for VN = 1.0V the current will be approximately 7.6mA. This 7.6mA would cause a 0.7V drop across the 100Ω resistor leaving 0.63V across the CT. To fine tune these quantities requires iterating until the values change negligibly. But, this first iteration indicates that a significant error will be present when the neutral voltage is low (1.0V).

From the KOR-11 saturation data (the scheme was originally designed to use the KOR-11) the magnetizing branch draws 2mA when 1.0V is across the CT. This equates to a magnetizing reactance of 1.0 / 2mA = j500Ω. This would result in a voltage drop across the 100Ω resistor of less than 0.2V leaving 0.96V across the CT.

Imag (mA)	**Vmag** (V)	**Zmag**(Ω)
12.0	1.0	83.3
130.0	50.0	384.6
144.0	60.0	416.7
165.0	70.0	424.2
194.0	80.0	412.4
230.0	90.0	391.3
281.0	100.0	355.9
500.0	114.0	228.0
100000.0	144.0	1.44

Table 3. Magnitizing branch reactance (C100, model KOR-15C).

Imag (mA)	**Vmag** (V)	**Zmag**(Ω)
2.0	1.0	500.0
10.0	10.0	1000.0

Table 4. Magnitizing branch reactance (C200, model KOR-11).

Table 3 and 4 contrast the actual CT used in the unbalance protection scheme (KOR-15C) and the CT specified by the original designer (KOR-11). The magnetizing branch impedances in the 1.0V range are significantly different. Note that only two points could reliably be taken from the KOR-11 saturation curve due to the poor reprographics quality of the source document.

Resolution

Since the alarm setting (1.25V) was in the region of operation resulting in the largest error with the KOR-15C, it was decided to ask the manufacture to replace the KOR-15C CT with the KOR-11 as was originally designed. This eliminated the problem of the magnetizing branch degrading voltage to the relay in the low voltage range.

The scheme designer suggested that another suitable method would have been to field test the circuit under expected voltages and to accommodate in the setpoints. It should be noted that this scheme cannot be finely tuned anyway due to the fact that the low-voltage capacitors and the resistors in the circuit are not precision elements and introduce error of their own. Field testing was done and the results shown in Table 5.

Itest (mA)	**Vtest** (V)	**Vrelay** (V)	**Vrelay/Vtest**
2.6	0.5	0.11	0.22
4.5	1.0	0.21	0.21
6.5	1.5	0.33	0.22
7.8	2.0	0.41	0.21
9.1	2.5	0.52	0.21
10.0	3.0	0.65	0.22
12.2	3.5	0.74	0.21
16.2	5.0	1.02	0.20
28.1	10.0	2.4	0.24
77.9	35.0	8.8	0.25

Table 5. Field test of C100, KOR-15C.

This data showed the KOR-15C at Albertville to be closer in its saturation characteristic to the KOR-11 data than to the specified KOR-15C saturation data. A simulation of one capacitor unit shorted was run with this actual field measured data incorporated into the CT model with the results shown in Figure 10.

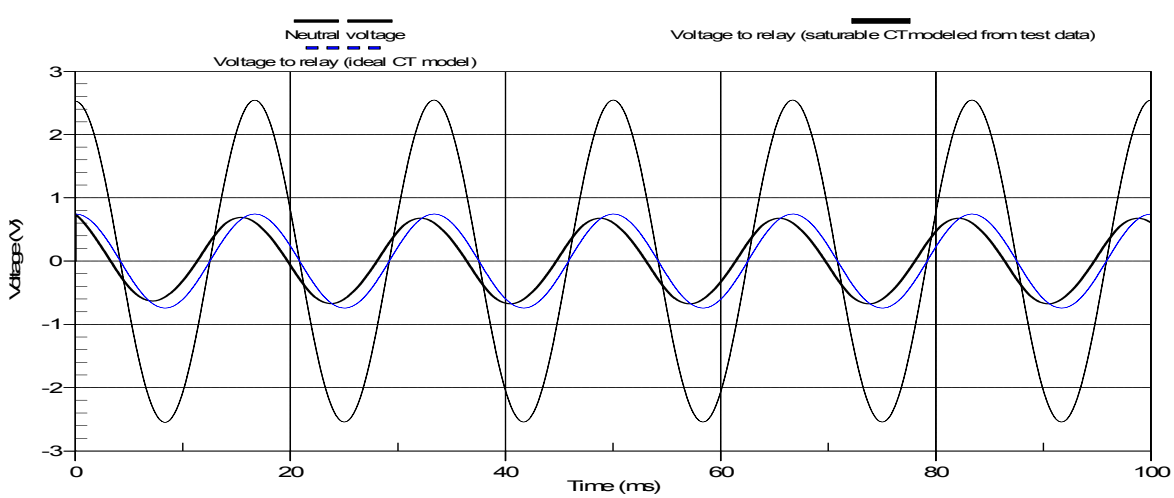

Figure 10. One capacitor unit shorted in one series group (actual CT test data).

A comparison of Figure 10 (one capacitor unit shorted and actual CT test data used in model) with Figure 8 (one capacitor unit shorted and CT design saturation curve data used) shows that the actual KOR-15C at Albertville was closer in is performance to the KOR-11. This helps to explain the consistent performance of the scheme under test conditions as shown in Table 5. The deviation from the expected 0.30 ratio could be explained by the slightly higher than designed excitation characteristic (5.1mA at 1.0V for actual CT vs. 2.0mA at 1.0V for specified KOR-11) and the fact that the other elements in the scheme are not precision elements.

It was subsequently determined that a third CT had also been used at several locations (C100, model JKW-5) that had a larger excitation requirement than the KOR-15C. This JKW-5 required just under 20mA at 1.0V excitation. This fact helped support the design decision to replace the existing CTs with the KOR-11 model as specified by the original scheme designer.

Summary

The low-voltage unbalance scheme analyzed in this paper is susceptible to inaccuracies if the excitation requirement of the isolation transformer (5:5 CT) exceeds those anticipated by the designer. These inaccuracies seem to only be a problem in the 1.0V range which is near the alarm setpoint level for the application described at Albertville, AL 161k substation. It is possible (and a viable solution) to field test the scheme and make the alarm and trip setpoints based on the test data. Also, field test data on the CT characteristic can be used in modeling as well.

The analysis described in this paper can easily be done by hand using the saturation curve. The benefit of doing the analysis in an ATP computer model is the flexibility in configuration. Once the model circuit has been built and tested it can be used in a variety of system configurations under various fault conditions as long as the limitations of the model are understood and respected (e.g., the simple CT saturation model used in this analysis would not be adequate for a high-frequency simulation of secondary transients). Also, building and using ATP models for simple cases facilitates an understanding of and familiarity with the program and power system modeling in general that will pay dividends when more complex modeling is necessary to understand system dynamics.

References

1) IEEE Guide for Application of Shunt Power Capacitors, IEEE Std 1036-1992.

2) IEEE Standard for Shunt Power Capacitors, IEEE Std 18™-2002.

3) IEEE Guide for the Protection of Shunt Capacitor Banks, IEEE Std C37.99-2000.

4) "Protection of Grounded Wye Capacitor Banks: Using a Low Voltage Neutral Capacitor", John E. Harder, February 1987. Available from: John E. Harder, 97 North Hartstrait Road, Bloomington, IN 47404-9700 USA, Phone 812-335-8362, E-Mail: harder97@compuserve.com

5) "ATP Simulator Test Of Low Impedance Bus Differential Protection", 50th Annual Conference For Protective Relay Engineers – Texas A&M University, April 8, 1997, J. Esztergalyos, S. Sambasivan, J.P. Gosalia, R. Ryan.

6) "Current Transformer Concepts", 46th Annual Georgia Tech Protective Relay Conference, April 29 – May 1, 1992, S.E. Zocholl, D.W. Smaha.

7) "Mathematical Models for Current, Voltage, and Coupling Capacitor Voltage Transformers", IEEE Transactions on Power Delivery, PE047PRD(06-99), Demetrios Tziouvaras, et al.

Software

ATP – Alternative Transients Program. ATP is the royalty-free version of the Electromagnetic Transients Program (EMTP). http://www.eeug.de/

ATPDraw – Graphical user interface for ATP. ATP files are simple text files. For large complex systems editing and maintaining text files is cumbersome. ATPDraw eases this burden and is free. http://www.eeug.de/

TOP – The Output Processor. TOP reads data from a variety of sources and transforms it into high quality graphics for inclusion in reports and documents. TOP was developed by Electrotek Concepts® to visualize data from a variety of simulation and measurement programs. http://www.pqsoft.com/TOP/index.htm

Biographical Sketch

Russell W. Patterson is Manager of System Protection & Analysis for the Tennessee Valley Authority (TVA) in Chattanooga, Tennessee. He is accountable for the application of all protective relays in the TVA transmission system and at Hydro, Fossil and Nuclear generating plants. He is responsible for ensuring that TVA's protective relays maximize the reliability and security of the transmission system. This includes setting and ensuring the proper application and development of protection philosophy for the TVA. He also reviews and makes protective relaying recommendations on new construction (including IPPs) and retrofit projects for the generation and transmission system. Prior to his position as Manager Russell was a Project Specialist in System Protection & Analysis and was TVA's Power Quality Manager responsible for field and customer support on PQ related issues and disturbances. Russell has performed transient simulations using EMTP for breaker Transient Recovery Voltage (TRV) studies including recommending mitigation techniques. Mr. Patterson earned the B.S.E.E. from the Mississippi State University in 1991 and has completed all coursework toward the M.S.E.E. at Mississippi State University. Russell is a registered professional engineer in the state of Tennessee and is a Senior Member of IEEE. Russell can be e-mailed at rwpatterson@tva.gov.

Appendix A – ATP file used to create the punch (include) file containing the KOR-15C saturation data.

The following text file is to be run in ATP. ATP passes this data through the SATURA routine to convert it to flux-i data as expected by ATP. The resulting flux-i data is contained in a simple text file with a “pch” extension (punch file). It is referenced in the main ATP file for inclusion in the CT model. This is a required extra step because ATP doesn’t like saturation characteristic data in the usual V-I rms engineering format.

```
BEGIN NEW DATA CASE
C 345678901234567890123456789012345678 90
C input data for routine SATURA to take
C V-I (RMS) curve for KOR-15C current
C transformer and convert to flux-i for
C use in 1-phase saturable transformer model.
C
C Sinusoidal test data was given in Volts and
C Amps RMS so the Vbase is set to 1V and the Sbase
C is set to 1VA.
C
C See section XIX-G of rule book for SATURA routine
C
C 345678901234567890123456789012345678 90
C   (Hz)   (kV)    (MVA)
C   FREQ   VBASE   SBASE  IPUNCH  KTHIRD
SATURATION
60.     .001     1.E-6    1     0
C
C 345678901234567890123456789012345678 90
C IRMS(pu)----->VRMS(pu)------->
           0.012             1.0
           0.130            50.0
           0.144            60.0
           0.165            70.0
           0.194            80.0
           0.230            90.0
           0.281           100.0
           0.500           114.0
           100.0           144.0
          9999.
C
$PUNCH, kor_15CT.pch
BLANK LINE
BEGIN NEW DATA CASE
BLANK LINE ENDING ALL CASES
```

The resulting flux-i data (Weber-turns vs. Amperes):

```
1.69705627E-02  3.75131798E-03
1.79936882E-01  1.87565899E-01
1.83841361E-01  2.25079079E-01
2.29722949E-01  2.62592259E-01
2.82830405E-01  3.00105439E-01
3.47623949E-01  3.37618619E-01
4.50936447E-01  3.75131798E-01
9.75971376E-01  4.27650250E-01
2.12544845E+02  5.40189790E-01
             9999
```